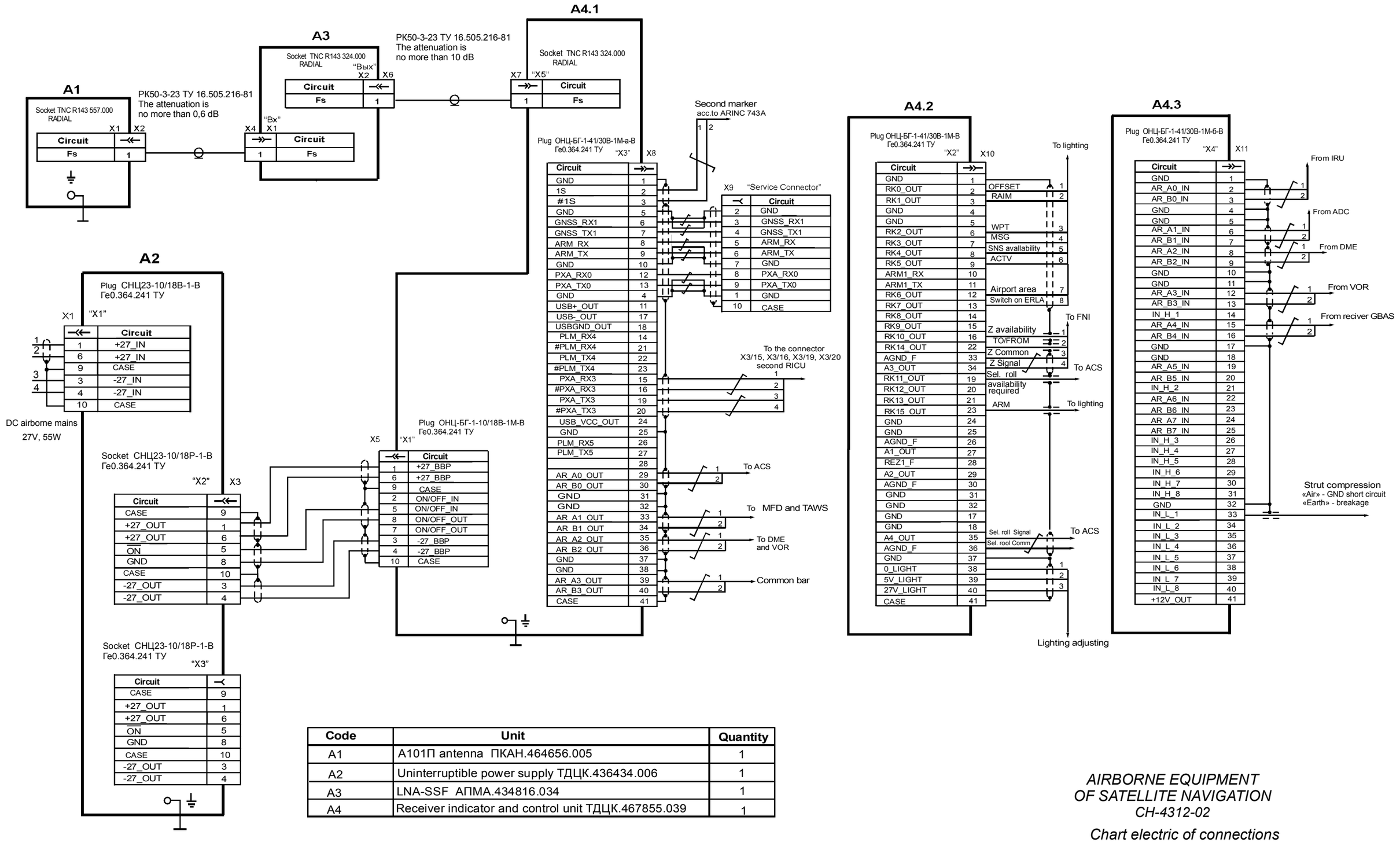

Code	Unit	Quantity
A1	A101П antenna ПКАН.464656.005	1
A2	Uninterruptible power supply ТДЦК.436434.006	1
A3	LNA-SSF АПМА.434816.034	1
A4	Receiver indicator and control unit ТДЦК.467855.039	1

AIRBORNE EQUIPMENT
OF SATELLITE NAVIGATION
CH-4312-02

Chart electric of connections